Electric Service Requirements for Small Interconnected Distributed Generation Sources

1. Purpose

These electric service requirements include information and criteria for use by TEP/UES employees and customers in regard to the interconnection and parallel operation of small distributed generation sources with TEP/UES's distribution system. The document is intended as an application of the TEP/UES policy "Customer Installation and Operation of Interconnected Distributed Generation Sources" set forth in SR-1.20, 1.21. The requirements presented herein are to ensure the safety of both TEP and customer personnel and property.

2. Applicability

This document applies to all distributed generation sources, single-phase and three-phase, 50 kWac nameplate rating and less, capable of parallel operation with TEP/UES's system.

3. Definitions

Backfeed: To energize a section of the TEP/UES distribution system from a generation source other than TEP/UES.

Disconnect Switch: A visible open disconnect device that the customer is required to install and maintain in accordance with the requirements set forth herein. It will completely isolate the customer's generating facility from the TEP/UES grid.

Distributed Generation (DG): Any type of customer electrical generator, static inverter, or generating facility that has the capability of being operated in electrical parallel with the TEP/UES distribution system.

Distribution System: The infrastructure constructed, maintained, and operated by TEP/UES to deliver electric service to retail customers at primary and secondary distribution voltages (13.8kV and less).

Generating Facility: All or part of the customer's electrical generator(s) or inverter(s) together with all protective, safety, and associated equipment necessary to produce electric power at the customer's facility.

Island: A condition in which a portion of the TEP/UES electric power system is energized solely by one or more customer generating facilities through the associated point(s) of interconnection while that portion of the TEP/UES electric power system is electrically separated from the rest of the TEP/UES electric power system.

Parallel System: A generating facility that is electrically interconnected to a bus common with the TEP electric distribution system, either on a momentary or continuous basis.

Point of Interconnection (Delivery): The physical location where TEP/UES service conductors are connected to the customer's service conductors to allow parallel operation of the customer's generating facility with the TEP/UES electric distribution system.

Static Inverter: A power electronic device that converts DC power to AC by means of electronic switching. For purposes of this document, only those static inverters designed to automatically separate from the TEP/UES system upon loss of utility voltage and prior to reclosing of the TEP/UES feeder breaker shall be acceptable for interconnection of DG systems.

4. Standards

All customer equipment shall conform to the nationally-recognized standards and recommended practices. These include, but are not limited to the following:

(a) NFPA 70--National Electrical Code (NEC)
(b) IEEE 1547--Standard for Interconnecting Distributed Resources with Electric Power Systems
(c) IEEE 1547.1--Standard for Conformance Test Procedures for Equipment Interconnecting Distributed Resources with Electric Power Systems
(d) IEEE 929--Recommended Practice for Utility Interface of Photovoltaic Systems
(e) IEEE 519--Recommended Practices and Requirements for Harmonic Control in Electrical Power Systems
(f) ANSI C84.1--Electric Power Systems and Equipment--Voltage Ratings (60Hz)
(g) UL 1741--Inverters, Converters, Controllers and Interconnection System Equipment for Use with Distributed Energy Resources

5. TEP/UES Design Review and Approval

Prior to installation of customer interconnection facilities, customer shall submit a distributed generation interconnection application for TEP/UES's review and written approval. Appropriate application forms may be found at www.tep.com. Required documentation to be furnished with the application may include an electrical one-line diagram, an electrical three-line diagram, AC and DC control schematics, plant location diagram, and site plan. Following TEP/UES approval, customer shall not remove, alter or otherwise modify or change the equipment specifications, including, without limitation, the plans, control and protective devices or settings, and the generating facility system design, type, size or configuration. If the customer desires to make such changes or modifications, the customer must revise and resubmit to TEP/UES plans describing the changes or modifications for approval by TEP/UES. No such change or modification may be made without prior approval of TEP/UES.

6. Metering Requirements

(a) General

The customer shall provide and install all necessary metering sockets and cabinets in accordance with TEP/UES service requirements, in locations acceptable to TEP/UES. TEP/UES will furnish and install the revenue meter (or revenue net meter) at the point of delivery to the customer's facility.

For DG systems participating in the various TEP/UES incentive programs, TEP/UES also requires a generator output (or production) meter. This meter shall be furnished and installed by TEP/UES for all DG facilities. For approved applicants participating in the residential single-phase incentive program, TEP/UES will also provide the meter base and required labels for installation by the customer's electrician. For commercial single-phase and three-phase systems, TEP/UES will furnish the meter only. Equipment should be selected from the approved material list in SR-452.

Under no circumstances shall any metering enclosure be used as a conduit or raceway for any conductors other than those phase conductors being metered and the associated grounded conductor (neutral) and grounding conductor (equipment ground). Also, the customer shall not make any connection or termination on the utility side of the metering enclosure.

(b) Arrangement and Location

The revenue meter shall be located at the point of delivery to the customer's facility which is typically at or near the service entrance section. Meter location shall also comply with the requirements of SR-405 pages 3 through 5 of 10. The generator output meter shall be located within 10 feet of the revenue meter. Exceptions to this may be granted following engineering review and provided that appropriate labeling criteria are met. Refer to Drawings 1, 2, 3 and 4 for further details.

(c) Meter Socket Identification

Revenue meter socket identification shall be as required by SR-405 page 2 of 10. The generation meter socket shall be labeled "Distributed Generation Meter" and shall employ signage as shown in Drawings 1, 2, 3 and 4.

(d) Meter Socket Heights

Minimum and maximum meter socket heights shall be as specified in SR-405 page 2 of 10.

(e) Equipment Protection and Grounding

Customer shall provide and install protective cabinets or other approved enclosures for all meters and metering equipment in accordance with SR-405 page 5 of 10 when required by TEP/UES. Meter sockets and all related metering enclosures and equipment shall be grounded in compliance with the NEC and/or any applicable local codes.

(f) Working Space

Working space requirements for all metering equipment shall be as specified in SR-405 page 10 of 10.

7. Disconnect Switches

(a) General

As required by TEP/UES's Interconnection Requirements for Distributed Generation, the customer shall provide and install a disconnect switch to isolate all ungrounded conductors of the generating facility from the TEP/UES system. The switch shall be a gang-operated, load-break device with a visible air-gap in the open position. It shall be rated for the current and voltage requirements of the generating facility and shall be lockable in the open position. In addition to the DG Service disconnect switch, the customer shall also provide and install any required meter switches. For synchronous generators, an additional disconnect switch shall be installed between the DG meter and the generation source. Refer to SR-405 page 1 of 10 and Drawings 1, 2, 3 and 4 for further information.

For residential single-phase DG systems participating in the various TEP/UES incentive programs, (non-line side tap installations only) TEP/UES will provide the DG disconnect switch for installation by the customer's electrician. For all commercial single-phase systems and all three-phase facilities, the customer shall be responsible for furnishing and installing the required disconnect switch.

(b) Location

The DG Service disconnect switch and all required meter switches shall be located within 10 feet of the customer's service entrance equipment and installed between the revenue meter and the DG meter (see Drawings 1, 2, 3 and 4.) Exceptions to this policy may be granted based on engineering review. Switch installations shall be accessible and operable to TEP/UES personnel at all times.

(c) Labeling

The DG Service disconnect switch shall be labeled as per the requirements of SR-1.20 and shall employ signage as shown in Drawings 1, 2, 3 and 4. For residential single-phase installations participating in the various TEP/UES incentive programs, TEP will provide the required label for the disconnect switch.

8. Technical Requirements

(a) Line Side Taps

In the case that a generator is connected or tapped to the line (TEP/UES) side of a service entrance main breaker, as may be permitted by the NEC, the following requirements apply:

1. A line side tap constitutes a new service as defined by the NEC and is subject to all applicable NEC requirements and/or requirements adopted by the local code-enforcement authority.
2. TEP/UES will energize this service only after the facility has passed the inspection of the applicable government agency and notification has been received by TEP/UES as is described in the process for new services elsewhere in these Service Requirements.
3. Any line side tap shall be made without modifications to any factory installed and/or factory listed equipment or components, unless such tap is expressly authorized by the manufacturer and/or listing agency, and performed in strict accordance with the manufacturer's directions and specifications.

(b) Minimum Protective Requirements

1. An undervoltage contactor is required for induction and synchronous generators.
2. For generators capable of contributing fault current to the TEP/UES system, customer overcurrent protection shall be set to detect and trip for any fault between the customer's main breaker and TEP/UES's substation breaker prior to operation of the TEP/UES protective device. The customer's overcurrent device may trip either the customer's generator breaker or the customer's main breaker. Circuit breakers, if backfed, shall be suitable for such operation.
3. Synchronous generators require a synchronizing scheme, either manual with a synch check relay, or an automatic synchronizer.
4. Static inverters shall be tested to UL 1741 by a Nationally Recognized Testing Laboratory (NRTL) certified by OSHA to perform the UL 1741 test standard.

(c) Distribution Transformer

1. Single-phase sources: If capable of backfeeding the TEP/UES system during fault conditions, a customer's single-phase generator can only be connected to TEP/UES distribution transformers which have the primary connected phase-to-ground and are not part of a three-phase bank.
2. Three-phase sources: A customer's three-phase generator can only be connected to the TEP/UES system through a TEP/UES wye ground - wye ground connected three-phase pad-mount transformer or a wye ground - wye ground overhead three-phase transformer bank. Customer must furnish an appropriately sized neutral conductor in the same conduits and/or raceways as the phase conductors to connect the generator or static inverter neutral to the TEP/UES distribution transformer neutral. The generator or static inverter neutral must be solidly grounded. If this requirement cannot be met, customer may furnish a delta - wye ground isolation transformer between their generator or static inverter and the utility distribution transformer.
3. Customer generators with a combined total rating of over 10 kWac, as measured at the service entrance, will be required to be isolated from other customers fed off the same TEP/UES transformer. This can be accomplished by installing a separate transformer connecting to the TEP/UES distribution feeder that is dedicated to the customer with DG in excess of 10 kWac. All work necessary to modify existing TEP/UES facilities to accomodate customer-owned DG shall be done at the customer's expense.

9. Customer Operating Requirements

This section provides the operating requirements that the customer must follow and the responsibilities that the customer must assume for the operating their generation in parallel to the TEP/UES system:

(a) Quality of service: The operation of the customer's generation facility must not reduce the quality of service to the TEP/UES electric system or other TEP/UES customers. No abnormal voltages, currents, frequencies, or interruptions are permitted.

(b) De-energized TEP/UES circuit: The customer will at no time energize a de-energized TEP/UES circuit.

(c) Inhibited parallel operation: If while operating parallel to TEP/UES's system, any of the protective devices operate inhibiting parallel operation, the customer will perform the following procedures prior to attempting any further parallel operation with TEP/UES *(Note: Static inverter based systems conforming to the technical requirements detailed above will automatically disconnect from the TEP system upon loss of utility voltage. It will remain disconnected until power is restored at which time it will wait five minutes to re-synchronize to TEP*/UES*'s system):*

1. Determine whether the TEP/UES circuit is energized or de-energized.
2. If TEP's circuit has been continuously energized, then the customer will not attempt to reconnect their system in parallel with the utility until the cause of a protective device misoperation has been corrected by a certified person and TEP/UES has inspected and is satisfied that the customer's system is operating properly.
3. If it is determined that the TEP/UES circuit is de-energized, the customer must not attempt to reconnect their system until it is confirmed by TEP/UES that power has been restored and TEP/UES's circuit is energized.
4. The customer is not prohibited from isolating their system from TEP/UES and supplying their own premise wiring while TEP/UES's circuit is de-energized.

(d) The customer is responsible for damage caused to other customers and to TEP/UES as a result of improper operation or malfunction of their generation facilities.

(e) TEP/UES is not responsible for damage caused to other customers and to TEP/UES as a result of improper operation or malfunction of the customer's generation facilities.

(f) The customer shall delay reconnection of its generation facilities to TEP/UES for a minimum of one minute after the TEP/UES voltage and frequency are restored to normal. TEP/UES is not responsible for damage caused to the customer's facility as a result of TEP/UES's automatic or manual reclosing of its distribution feeder breaker or recloser.

Drawing 1

CONVENTIONAL SERVICE CONNECTION DETAIL
SINGLE AND THREE PHASE INSTALLATIONS

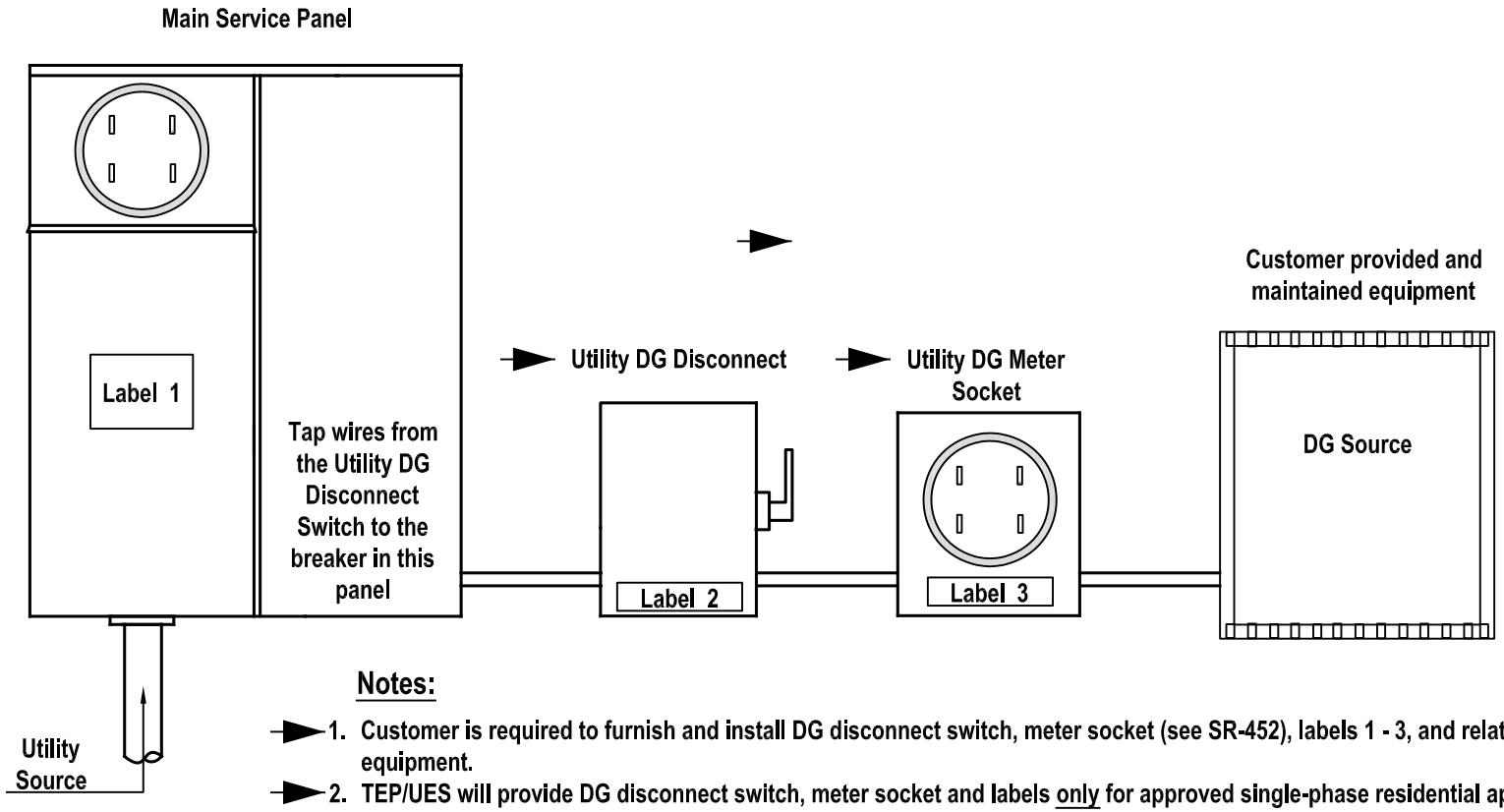

Notes:

1. Customer is required to furnish and install DG disconnect switch, meter socket (see SR-452), labels 1 - 3, and related DG equipment.
2. TEP/UES will provide DG disconnect switch, meter socket and labels only for approved single-phase residential applicants participating in the Upfront Incentive (UFI) program.
3. Revenue and DG Meters are provided by and installed by TEP/UES.
4. The TEP/UES Conservation and Renewable Programs Department inspection is required for approval.
5. A Governmental Agency Clearance is required for all DG installations.
6. Labels are available for purchase at Border States Electric 294-1414.

Label 1
TUC047-W-AE-X42

Label 2
TUC046-W-AE-C22

Label 3
TUC045-W-AE-E12

Tucson Electric Power

UniSourceEnergy Services
SANTA CRUZ COUNTY

INITIATED BY	REVISION NO.
ESR COMM.	5
GC	STANDARDS COMM.
9-06	10-12
	EFFECTIVE DATE
	11-12

SR-1.22
Pg. 6 of 9

Drawing 2

LINE SIDE TAP SERVICE CONNECTION DETAIL
SINGLE AND THREE PHASE INSTALLATIONS

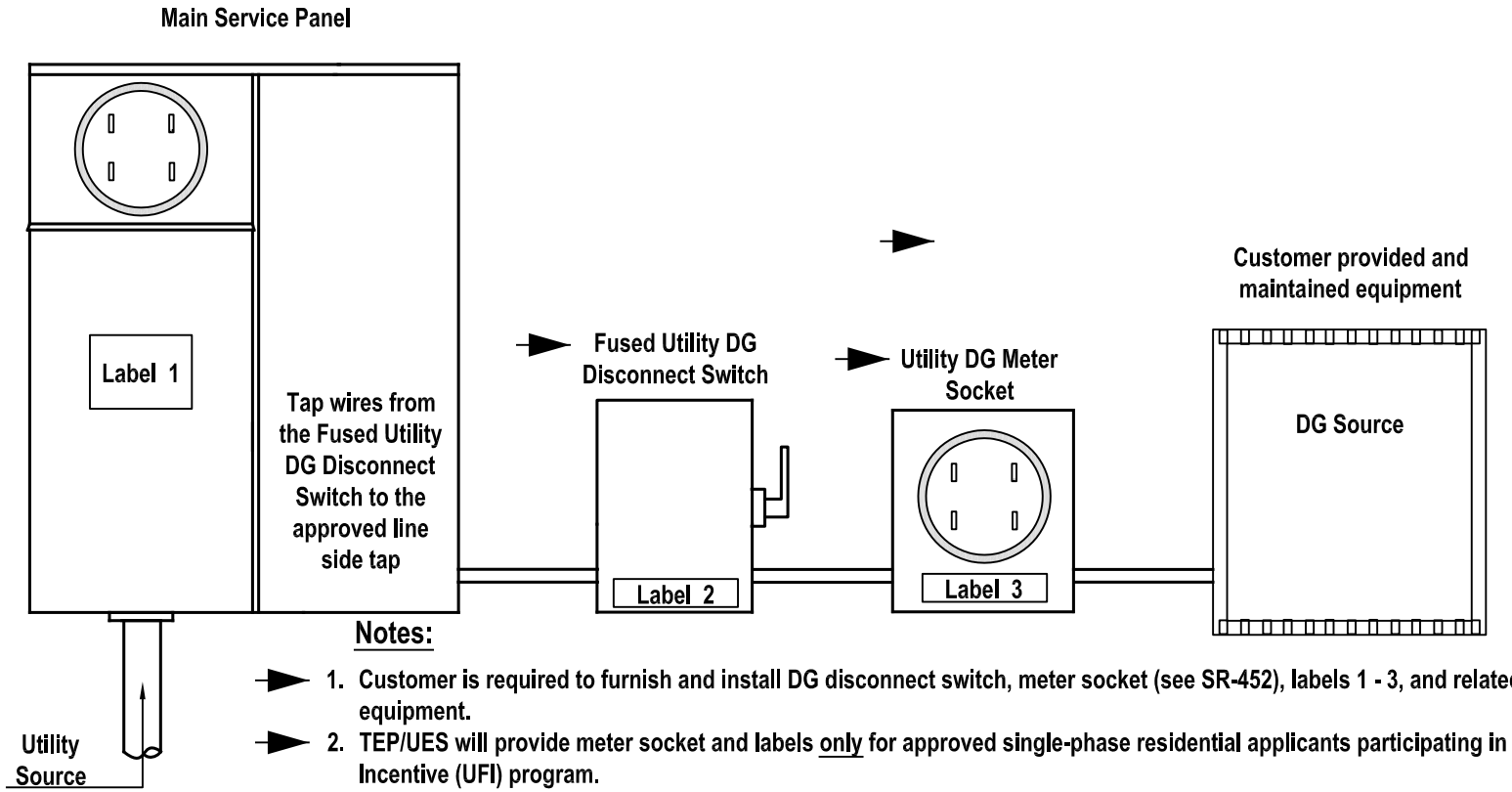

Notes:

1. Customer is required to furnish and install DG disconnect switch, meter socket (see SR-452), labels 1 - 3, and related DG equipment.
2. TEP/UES will provide meter socket and labels only for approved single-phase residential applicants participating in the Upfront Incentive (UFI) program.
3. Revenue and DG Meters are provided by and installed by TEP/UES.
4. The TEP/UES Conservation and Renewable Programs Department inspection is required for approval.
5. A Governmental Agency Clearance is required for all DG installations.
6. Labels are available for purchase at Border States Electric 294-1414.
7. Line side taps shall be connected inside the customer's load center using only utility approved connection means and methods

Label 1
TUC047-W-AE-X42

Label 2
TUC046-W-AE-C22

Label 3
TUC045-W-AE-E12

Tucson Electric Power

UniSourceEnergy Services
SANTA CRUZ COUNTY

INITIATED BY	REVISION NO.
ESR COMM.	9-06
GC	STANDARDS COMM.
EFFECTIVE DATE	11-12
10-12	6

SR-1.22
Pg. 7 of 9

Drawing 3

SINGLE AND THREE PHASE COMMERCIAL SERVICE CONNECTION INSTALLATIONS DETAIL

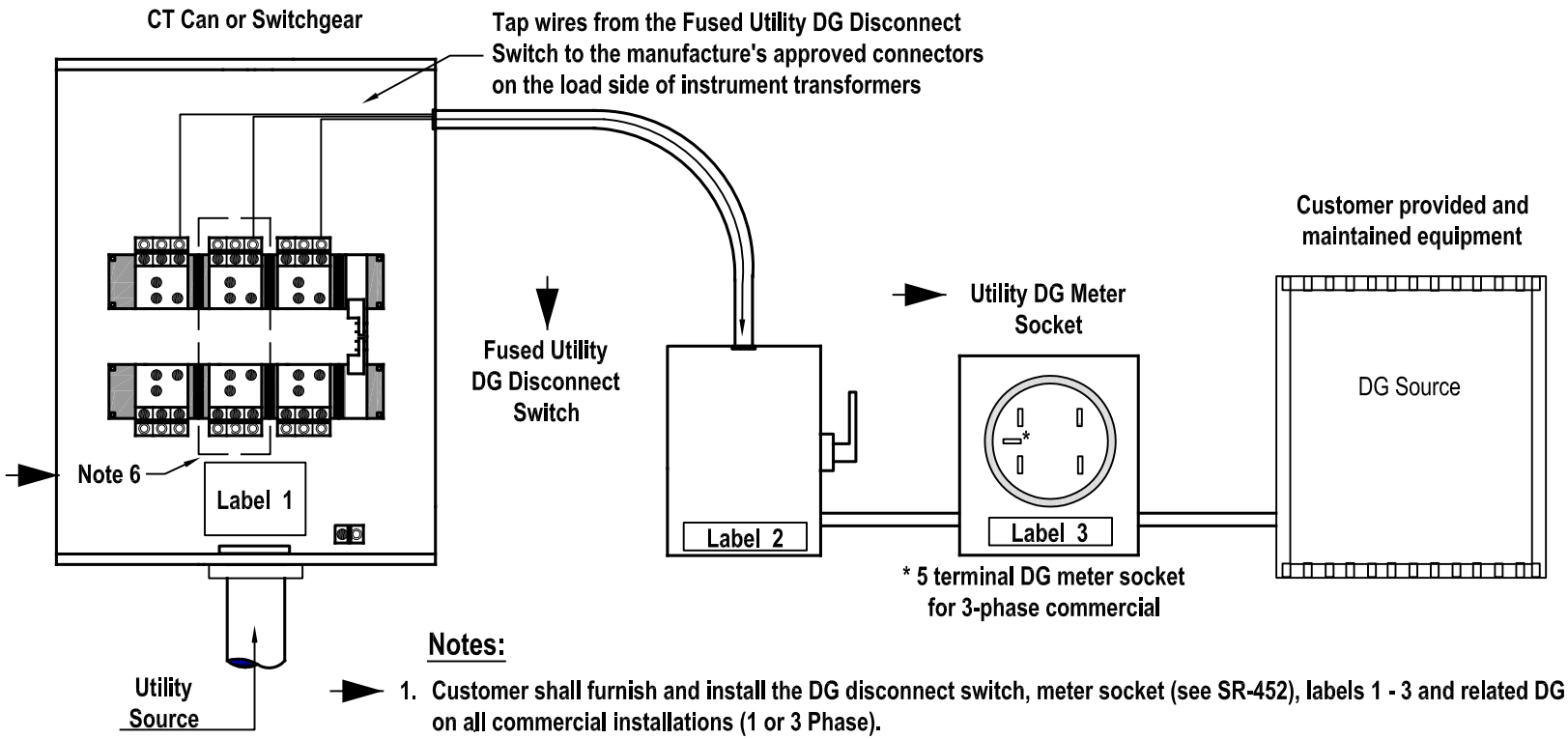

Notes:

1. Customer shall furnish and install the DG disconnect switch, meter socket (see SR-452), labels 1 - 3 and related DG equipment on all commercial installations (1 or 3 Phase).
2. Revenue and DG Meters are provided by and installed by TEP/UES.
3. The TEP/UES Conservation and Renewable Programs Department inspection is required for approval.
4. A Governmental Agency Clearance is required for all DG installations.
5. Labels are available for purchase at Border States Electric 294-1414.
6. Middle bus is not present on a single phase installation.

Label 1
TUC047-W-AE-X42

Label 2
TUC046-W-AE-C22

Label 3
TUC045-W-AE-E12

Tucson Electric Power

UniSourceEnergy Services
SANTA CRUZ COUNTY

INITIATED BY	GC	REVISION NO.	4
ESR COMM.	9-06	STANDARDS COMM.	10-12
		EFFECTIVE DATE	11-12

Drawing 4

SERVICE CONNECTION DETAIL
MULTI-METER INSTALLATIONS

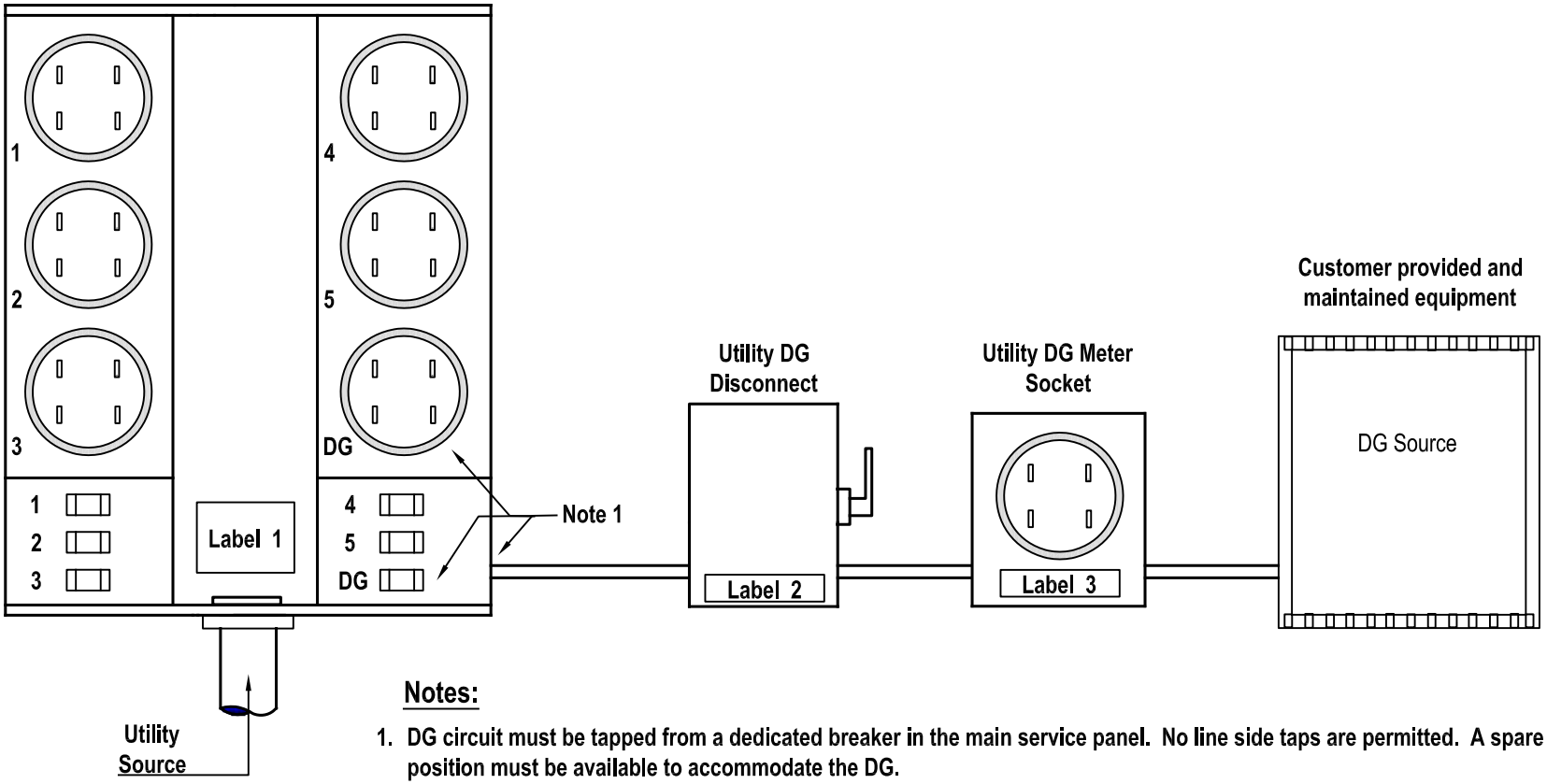

Notes:

1. DG circuit must be tapped from a dedicated breaker in the main service panel. No line side taps are permitted. A spare meter position must be available to accommodate the DG.
2. Customer is required to furnish and install the DG disconnect switch, DG meter socket (see SR-452), labels 1 - 3 and related DG equipment.
3. Revenue and DG Meters are provided by and installed by TEP/UES.
4. A TEP/UES Renewable Energy Department inspection may be required for approval.
5. A Governmental Agency Clearance is required for all DG installations.
6. Labels are available for purchase at Border States Electric 294-1414.

Label 1
TUC047-W-AE-X42

Label 2
TUC046-W-AE-C22

Label 3
TUC045-W-AE-E12

Tucson Electric Power

UniSourceEnergy Services
SANTA CRUZ COUNTY

INITIATED BY	ESR COMM.
ME	10-12
REVISION NO.	
STANDARDS COMM.	
EFFECTIVE DATE	11-12

SR-1.22
Pg. 9 of 9